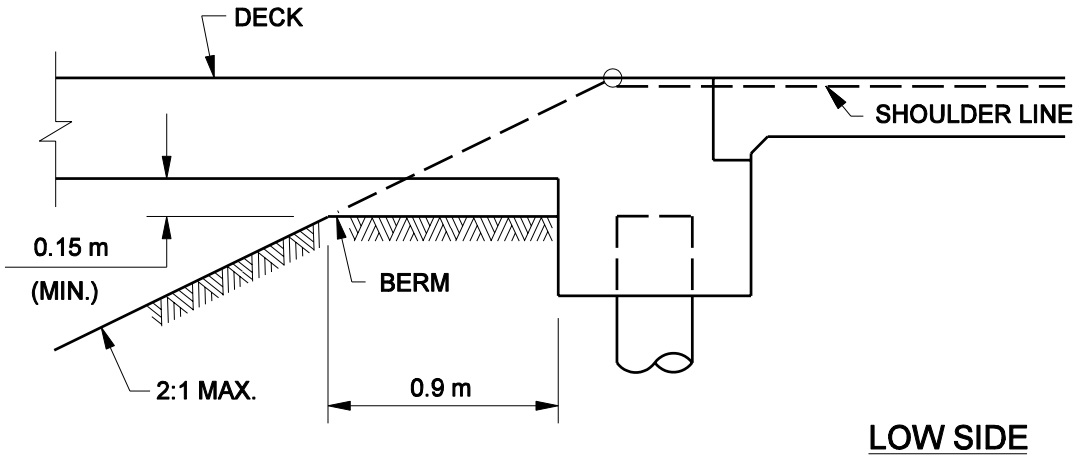

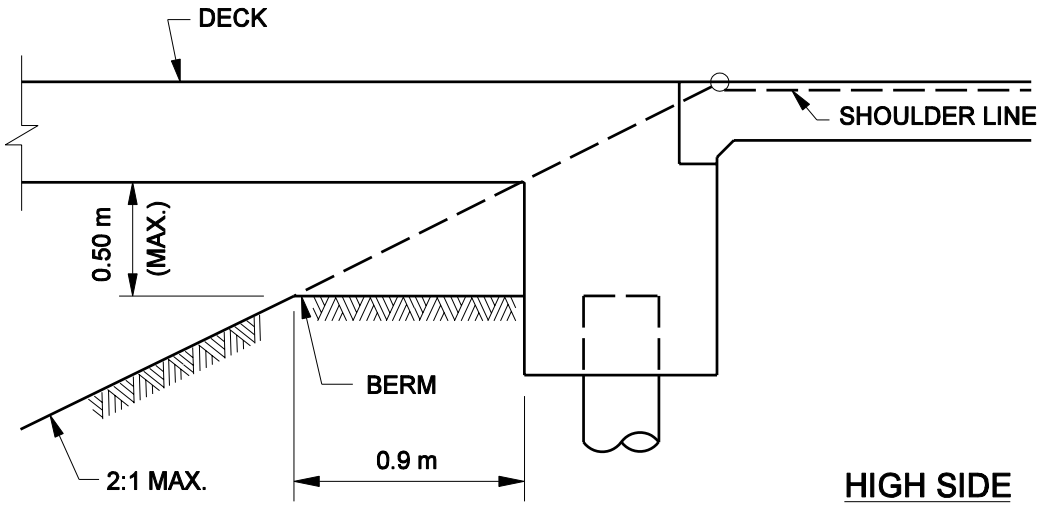

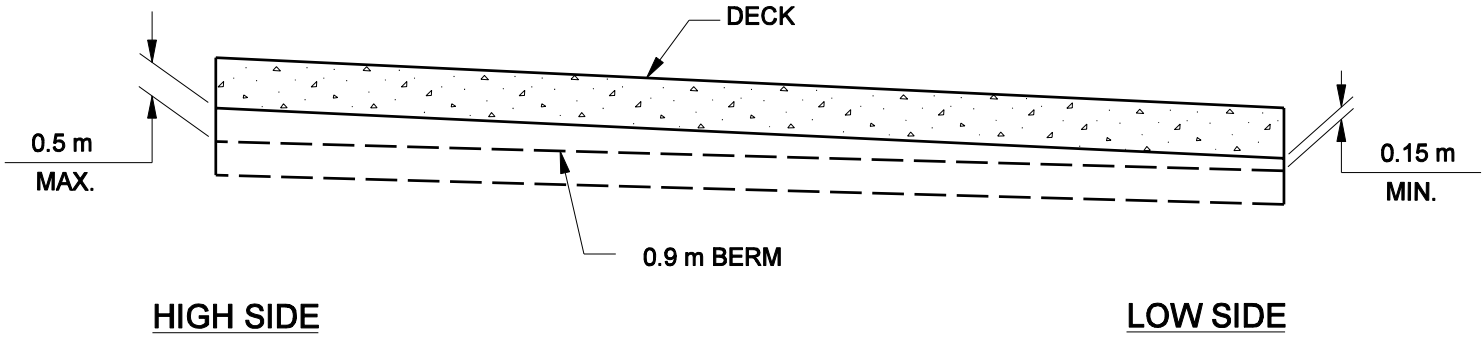

END BENT BERMS

Figure 59-1O